Kramer Electronics, Ltd.

USER MANUAL

Models:

VM-8H, ***1:8 HDMI Distributor***

VM-16H, ***1:16 HDMI Distributor***

Contents

1	**Introduction**	**1**
2	**Getting Started**	**1**
2.1	Quick Start	2
3	**Overview**	**3**
3.1	Recommendations for Best Performance	4
3.2	Recycling Kramer Products	4
4	**Your HDMI Distributors**	**4**
5	**Installing the VM-8H/VM-16H in a Rack**	**8**
6	**Connecting the VM-8H 1:8 HDMI Distributor**	**9**
6.1	Acquiring the EDID	10
6.1.1	Acquiring the EDID from one Output	10
6.1.2	Acquiring the Default EDID	11
6.1.3	Acquiring the EDID from Several Outputs	11
7	**Technical Specifications**	**12**

Figures

Figure 1: VM-8H 1:8 HDMI Distributor 5
Figure 2: VM-16H 1:16 H Distributor 6
Figure 3: Connecting a VM-8H 1:8 HDMI Distributor 9

Tables

Table 1: HDMI Distributor Features 7
Table 2: The EDID Modes 10
Table 3: Technical Specifications of the VM-8H and the VM-16H 12

1 Introduction

Welcome to Kramer Electronics! Since 1981, Kramer Electronics has been providing a world of unique, creative, and affordable solutions to the vast range of problems that confront video, audio, presentation, and broadcasting professionals on a daily basis. In recent years, we have redesigned and upgraded most of our line, making the best even better! Our 1,000-plus different models now appear in 11 groups[1] that are clearly defined by function.

Thank you for purchasing your Kramer **VM-8H** *1:8 HDMI Distributor* and/or **VM-16H** *1:16 HDMI Distributor*. The HDMI distributor is ideal for:

- Home theater, presentation and multimedia applications
- Rental and staging
- Retail store displays

The package includes the following items:

- **VM-8H** *1:8 HDMI Distributor* and/or **VM-16H** *1:16 HDMI Distributor*
- Power cord and rack "ears"
- This user manual[2]

2 Getting Started

We recommend that you:

- Unpack the equipment carefully and save the original box and packaging materials for possible future shipment
- Review the contents of this user manual
- Use Kramer high performance high resolution cables[3]

1 GROUP 1: Distribution Amplifiers; GROUP 2: Switchers and Routers; GROUP 3: Control Systems; GROUP 4: Format/Standards Converters; GROUP 5: Range Extenders and Repeaters; GROUP 6: Specialty AV Products; GROUP 7: Scan Converters and Scalers; GROUP 8: Cables and Connectors; GROUP 9: Room Connectivity; GROUP 10: Accessories and Rack Adapters; GROUP 11: Sierra Products

2 Download up-to-date Kramer user manuals from our Web site at http://www.kramerelectronics.com/support/product_downloads.asp

3 The complete list of Kramer cables is on our Web site at http://www.kramerelectronics.com

2.1 Quick Start

This section provides instructions for rack mounting the unit[1].

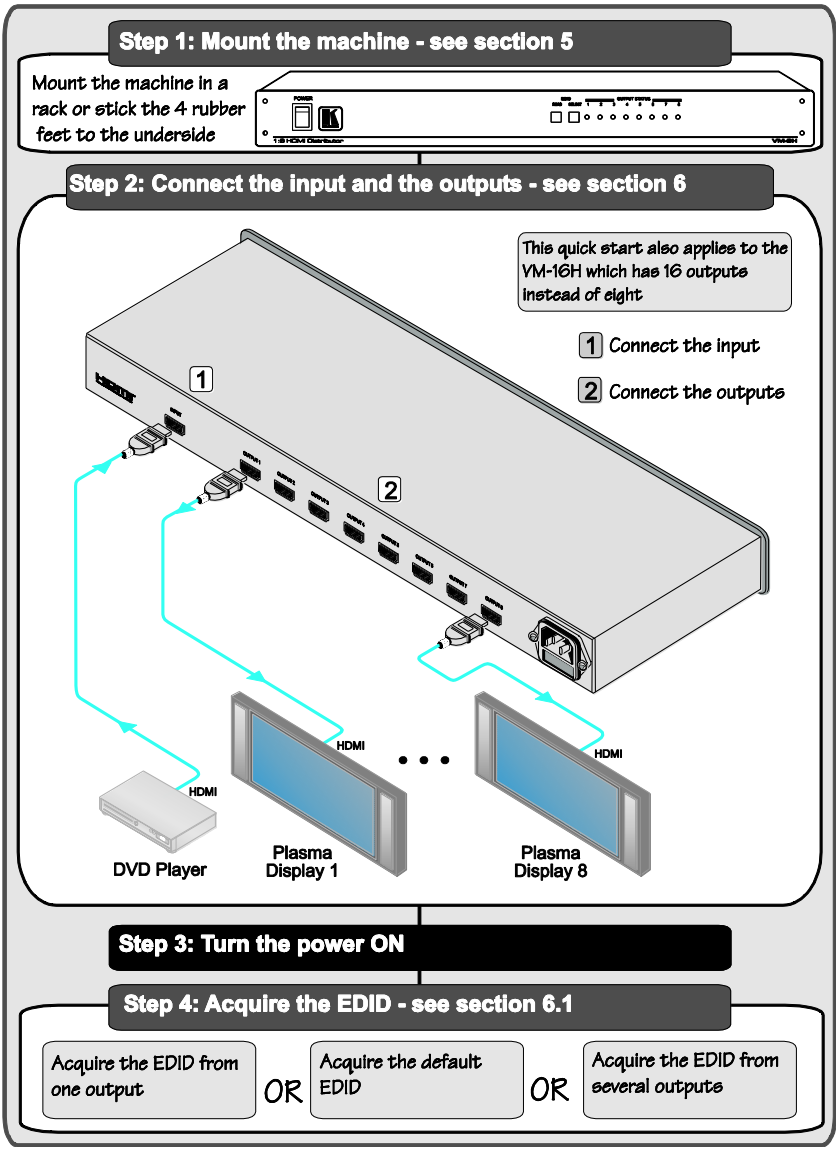

1 This quick start also applies to the VM-16H which has 16 outputs instead of eight

3 Overview

The Kramer **VM-8H** *1:8 HDMI Distributor* and the **VM-16H** *1:16 HDMI Distributor* are high quality distributors that accept an HDMI input and distribute the signal to 8/16 outputs respectively, allowing one or more of the outputs to be connected to receiving devices, thus making them a versatile, reliable component in a video system. The **VM-8H/VM-16H** distribute signals having resolutions up to and including 1080p, and all HDTV formats.

In particular, the HDMI distributors feature:

- Up to 2.25Gbps bandwidth per graphic channel[1]
- Data reclocking and equalization
- A default EDID[2] for fast and efficient connection of the unit[3]
- I-EDIDPro™ Kramer Intelligent EDID Processing™, an intelligent EDID handling and processing algorithm that ensures Plug and Play operation for HDMI systems
- 3D pass-through
- HDMI Support – HDMI (with Deep Color, x.v.Color™, Lip Sync, HDMI Uncompressed Audio Channels, Dolby TrueHD, DTS-HD, CEC)
- HDMI connectors[4], output status LEDs4, and EDID read and select buttons

The HDMI distributors are housed in a 19" 1U rack-mountable enclosure, and are fed from a 100-264V AC universal switching power supply.

1 Suitable for resolutions up to 1080p, and for all HD resolutions

2 EDID is Extended Display Identification Data

3 The default EDID feature lets you connect the VM-8H/VM-16H without having to connect a display to the output

4 Eight for the VM-8H and 16 for the VM-16H

3.1 Recommendations for Best Performance

To achieve the best performance:

- Connect only good quality connection cables, thus avoiding interference, deterioration in signal quality due to poor matching, and elevated noise levels (often associated with low quality cables)
- Do not secure the cables in tight bundles or roll the slack into tight coils
- Avoid interference from neighboring electrical appliances and position your HDMI distributors away from moisture, excessive sunlight and dust

This equipment is to be used only inside a building. It may only be connected to other equipment that is installed inside a building.

3.2 Recycling Kramer Products

The Waste Electrical and Electronic Equipment (WEEE) Directive 2002/96/EC aims to reduce the amount of WEEE sent for disposal to landfill or incineration by requiring it to be collected and recycled. To comply with the WEEE Directive, Kramer Electronics has made arrangements with the European Advanced Recycling Network (EARN) and will cover any costs of treatment, recycling and recovery of waste Kramer Electronics branded equipment on arrival at the EARN facility. For details of Kramer's recycling arrangements in your particular country go to our recycling pages at *http://www.kramerelectronics.com/support/recycling/*.

4 Your HDMI Distributors

Figure 1 illustrates the **VM-8H** *1:8 HDMI Distributor*, Figure 2 illustrates the **VM-16H** *1:16 HDMI Distributor*, and Table 1 defines both the **VM-8H** and the **VM-16H**.

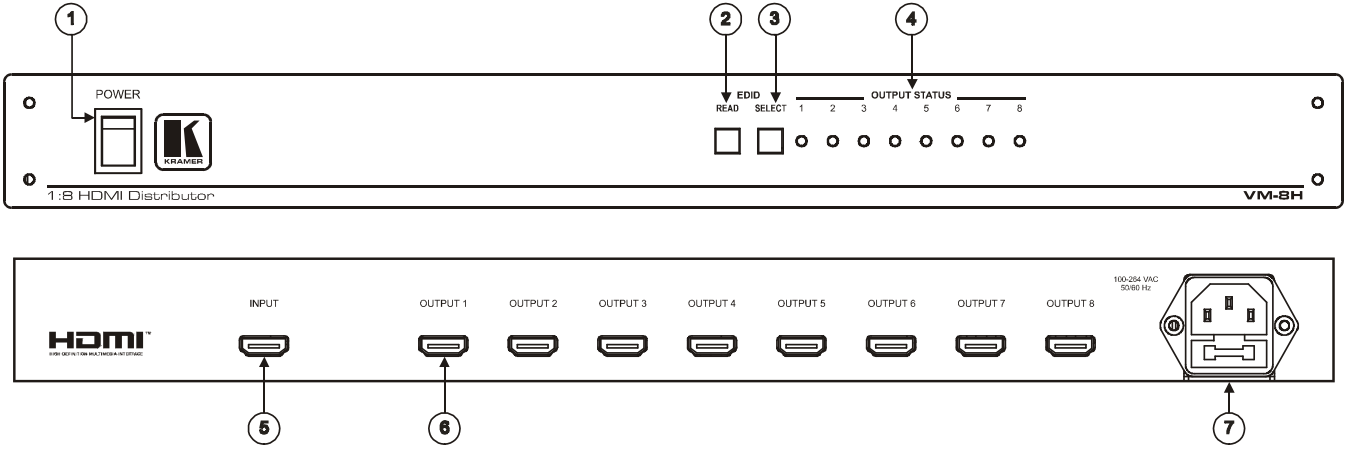

Figure 1: VM-8H 1:8 HDMI Distributor

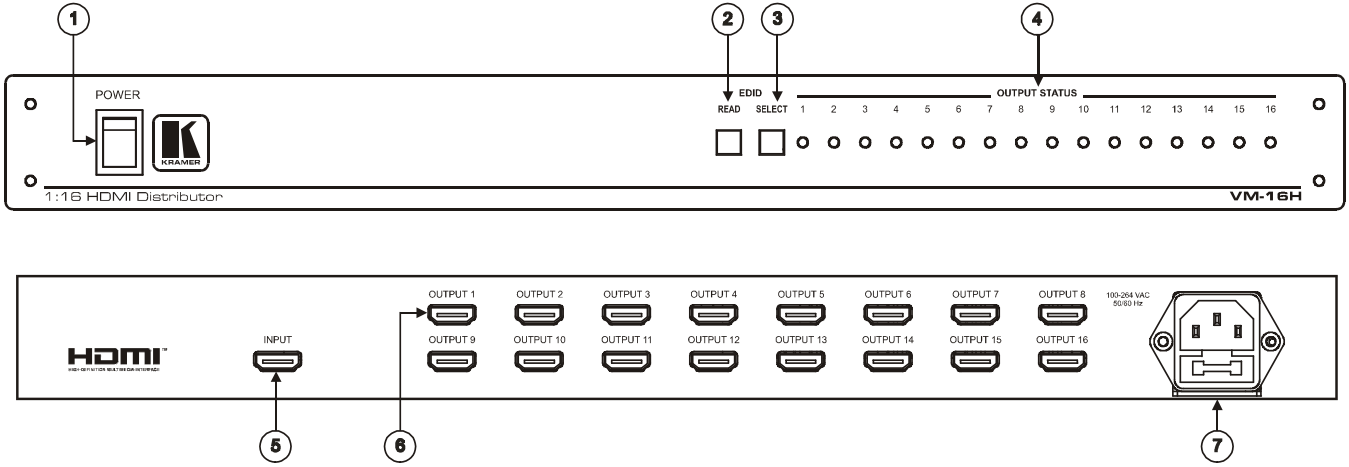

Figure 2: VM-16H 1:16 H Distributor

Table 1: HDMI Distributor Features

#	Feature		Function
1	*POWER* Switch		Illuminated switch for turning the unit ON or OFF
2	*EDID*	*READ* Button	Press to read the EDID of the selected display
3		*SELECT* Button	Select the desired display for EDID information
4	*OUTPUT STATUS* LEDs		LEDs light when an output(s) is connected and active; LEDs flash when selecting the EDID (see Section 6.1)
5	*INPUT* HDMI Connector		Connects to the HDMI source
6	*OUTPUT* HDMI Connectors		Connect to the HDMI acceptors[1]
7	Power Connector with Fuse		AC connector enabling power supply to the unit

1 For the VM-8H, from 1 to 8; for the VM-16H, from 1 to 16

5 Installing the VM-8H/VM-16H in a Rack

This section provides instructions for rack mounting the unit.

Before installing in a rack, be sure that the environment is within the recommended range:

OPERATING TEMPERATURE:	0º to +40ºC (32º to 104ºF)
STORAGE TEMPERATURE:	-40º to +70ºC (-40º to 158ºF)
HUMIDITY:	10% to 90%, RHL non-condensing

CAUTION!

When installing on a 19" rack, avoid hazards by taking care that:

1. It is located within the recommended environmental conditions, as the operating ambient temperature of a closed or multi unit rack assembly may exceed the room ambient temperature.

2. Once rack mounted, enough air will still flow around the machine.

3. The machine is placed straight in the correct horizontal position.

4. You do not overload the circuit(s). When connecting the machine to the supply circuit, overloading the circuits might have a detrimental effect on overcurrent protection and supply wiring. Refer to the appropriate nameplate ratings for information. For example, for fuse replacement, see the value printed on the product label.

5. The machine is earthed (grounded) in a reliable way and is connected only to an electricity socket with grounding. Pay particular attention to situations where electricity is supplied indirectly (when the power cord is not plugged directly into the socket in the wall), for example, when using an extension cable or a power strip, and that you use only the power cord that is supplied with the machine.

To rack-mount a machine:

1. Attach both ear brackets to the machine. To do so, remove the screws from each side of the machine (3 on each side), and replace those screws through the ear brackets.

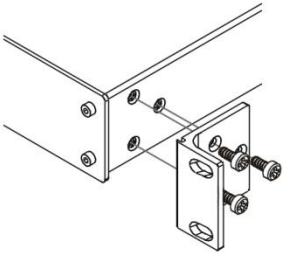

2. Place the ears of the machine against the rack rails, and insert the proper screws (not provided) through each of the four holes in the rack ears.

Note:

- In some models, the front panel may feature built-in rack ears
- Detachable rack ears can be removed for desktop use
- Always mount the machine in the rack before you attach any cables or connect the machine to the power
- If you are using a Kramer rack adapter kit (for a machine that is not 19"), see the Rack Adapters user manual for installation instructions available from our Web site

6 Connecting the VM-8H 1:8 HDMI Distributor

To connect the **VM-8H** *1:8 HDMI distributor*[1], do the following:

1. Connect an HDMI source (for example, a DVD player) to the INPUT connector.
2. Connect the eight OUTPUT connectors to eight[2] HDMI acceptors (for example, plasma displays).
3. Connect the power cord to the mains electricity.
4. Turn ON the POWER.
5. Acquire the EDID (see Section 6.1).

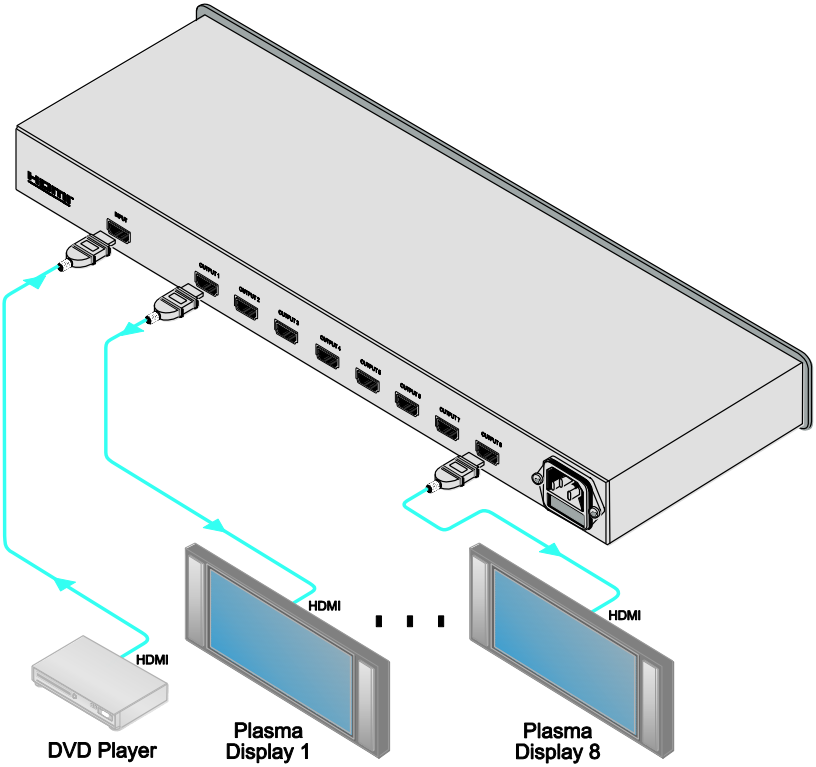

Figure 3: Connecting a VM-8H 1:8 HDMI Distributor

1 From this section on, all the information is relevant to both the VM-8H and the VM-16H, unless noted otherwise

2 As required. Up to 8 outputs can be connected on the VM-8H and up to 16 outputs can be connected on the VM-16H. Not all outputs need to be connected

6.1 Acquiring the EDID

The **VM-8H** initially operates with the default EDID. This means that you can turn ON the power before connecting any of the acceptors or the source.

You can acquire the EDID from:

- One Output (the selected output LED illuminates)
- The Default EDID (all the output LEDs flash)
- Several connected outputs, the Auto-mix Mode[1], (the output LEDs flash in sequence)

To cycle between the different modes (One Output, Default and Auto-mix), press the SELECT button, as defined in Table 2.

Table 2: The EDID Modes

Current EDID Mode	Appearance	To cycle to the Default EDID	To cycle to the Auto-mix EDID	To cycle to the One output EDID
One output	The selected output LED illuminates	Press the SELECT button once again after selecting output 8 (for **VM-8H**) or output 16 (for **VM-16H**). The output LEDs flash		
Default	The output LEDs flash		Press the SELECT button once	
Auto-mix	The output LEDs flash in sequence			Press the SELECT button to select the required output. The selected output flashes

To acquire or change the EDID of a new output display from:

- One output, see Section 6.1.1
- The default EDID, see Section 6.1.2
- Several connected outputs, see Section 6.1.3

6.1.1 Acquiring the EDID from one Output

To acquire the EDID of a new output display, do the following:

1. Press the SELECT button.
   The currently selected OUTPUT LED illuminates.
2. Press the SELECT button again to cycle from one output to another until reaching the desired output.
3. Press the READ button.
   The flashing ceases and the button illuminates. The **VM-8H** accesses

1 The EDID acquired is a weighted average of all the connected outputs. For example, if several displays with different resolutions are connected to the outputs, the acquired EDID supports all the resolutions, as well as other parameters included in the EDID

the EDID of the connected output.
The EDID of the selected output is stored in the non-volatile memory when the READ button no longer illuminates.

6.1.2 Acquiring the Default EDID

To acquire the default EDID, do the following:

1. Press the SELECT button.
   The OUTPUT LEDs flash simultaneously.
2. Press the READ button.
   The flashing ceases and the button illuminates. The **VM-8H** accesses the default EDID.
   The EDID of the selected output is stored in the non-volatile memory when the READ button no longer illuminates.

6.1.3 Acquiring the EDID from Several Outputs

To acquire or change the EDID via several connected outputs, do the following:

1. Press the SELECT button.
   The OUTPUT LEDs flash in sequence.
2. Press the READ button.
   The flashing ceases and the button illuminates. The **VM-8H** accesses the EDID of the connected outputs.
   The EDID is stored in the non-volatile memory when the READ button no longer illuminates.

7 Technical Specifications

Table 3 includes the technical specifications:

Table 3: Technical Specifications[1] of the VM-8H and the VM-16H

	VM-8H	**VM-16H**
INPUT:	HDMI connector	
OUTPUTS:	8 HDMI connectors	16 HDMI connectors
BANDWIDTH:	Supports up to 2.25Gbps per graphic channel	
COMPLIANCE WITH HDMI STANDARD:	Supports HDMI and HDCP	
CONTROLS:	SELECT and READ buttons for selecting and storing EDID information	
INDICATOR LEDs:	OUTPUT STATUS 1 to 8	OUTPUT STATUS 1 to 16
OPERATING TEMPERATURE:	0° to +40°C (32° to 104°F)	
STORAGE TEMPERATURE:	-40° to +70°C (-40° to 158°F)	
HUMIDITY:	10% to 90%, RHL non-condensing	
POWER CONSUMPTION:	100-264V AC, 50/60Hz, 28VA	100-264V AC, 50/60Hz, 48VA
DIMENSIONS:	19" x 7" x 1U W, D, H rack mountable	
WEIGHT:	3.5kg (7.7lbs) approx.	4.5kg (9.9lbs) approx.
ACCESSORIES:	Power cord, rack “ears”	
OPTIONS:	HDMI/HDMI male-to-male cables	

Warning:
This is a class A product, for professional applications and environments only

1 Specifications are subject to change without notice

LIMITED WARRANTY

The warranty obligations of Kramer Electronics for this product are limited to the terms set forth below:

What is Covered

This limited warranty covers defects in materials and workmanship in this product.

What is Not Covered

This limited warranty does not cover any damage, deterioration or malfunction resulting from any alteration, modification, improper or unreasonable use or maintenance, misuse, abuse, accident, neglect, exposure to excess moisture, fire, improper packing and shipping (such claims must be presented to the carrier), lightning, power surges, or other acts of nature. This limited warranty does not cover any damage, deterioration or malfunction resulting from the installation or removal of this product from any installation, any unauthorized tampering with this product, any repairs attempted by anyone unauthorized by Kramer Electronics to make such repairs, or any other cause which does not relate directly to a defect in materials and/or workmanship of this product. This limited warranty does not cover cartons, equipment enclosures, cables or accessories used in conjunction with this product.

Without limiting any other exclusion herein, Kramer Electronics does not warrant that the product covered hereby, including, without limitation, the technology and/or integrated circuit(s) included in the product, will not become obsolete or that such items are or will remain compatible with any other product or technology with which the product may be used.

How Long Does this Coverage Last

Seven years as of this printing; please check our Web site for the most current and accurate warranty information.

Who is Covered

Only the original purchaser of this product is covered under this limited warranty. This limited warranty is not transferable to subsequent purchasers or owners of this product.

What Kramer Electronics will do

Kramer Electronics will, at its sole option, provide one of the following three remedies to whatever extent it shall deem necessary to satisfy a proper claim under this limited warranty:

1. Elect to repair or facilitate the repair of any defective parts within a reasonable period of time, free of any charge for the necessary parts and labor to complete the repair and restore this product to its proper operating condition. Kramer Electronics will also pay the shipping costs necessary to return this product once the repair is complete.
2. Replace this product with a direct replacement or with a similar product deemed by Kramer Electronics to perform substantially the same function as the original product.
3. Issue a refund of the original purchase price less depreciation to be determined based on the age of the product at the time remedy is sought under this limited warranty.

What Kramer Electronics will not do Under This Limited Warranty

If this product is returned to Kramer Electronics or the authorized dealer from which it was purchased or any other party authorized to repair Kramer Electronics products, this product must be insured during shipment, with the insurance and shipping charges prepaid by you. If this product is returned uninsured, you assume all risks of loss or damage during shipment. Kramer Electronics will not be responsible for any costs related to the removal or re-installation of this product from or into any installation. Kramer Electronics will not be responsible for any costs related to any setting up this product, any adjustment of user controls or any programming required for a specific installation of this product.

How to Obtain a Remedy under this Limited Warranty

To obtain a remedy under this limited warranty, you must contact either the authorized Kramer Electronics reseller from whom you purchased this product or the Kramer Electronics office nearest you. For a list of authorized Kramer Electronics resellers and/or Kramer Electronics authorized service providers, please visit our web site at www.kramerelectronics.com or contact the Kramer Electronics office nearest you.

In order to pursue any remedy under this limited warranty, you must possess an original, dated receipt as proof of purchase from an authorized Kramer Electronics reseller. If this product is returned under this limited warranty, a return authorization number, obtained from Kramer Electronics, will be required. You may also be directed to an authorized reseller or a person authorized by Kramer Electronics to repair the product.

If it is decided that this product should be returned directly to Kramer Electronics, this product should be properly packed, preferably in the original carton, for shipping. Cartons not bearing a return authorization number will be refused.

Limitation on Liability

THE MAXIMUM LIABILITY OF KRAMER ELECTRONICS UNDER THIS LIMITED WARRANTY SHALL NOT EXCEED THE ACTUAL PURCHASE PRICE PAID FOR THE PRODUCT. TO THE MAXIMUM EXTENT PERMITTED BY LAW, KRAMER ELECTRONICS IS NOT RESPONSIBLE FOR DIRECT, SPECIAL, INCIDENTAL OR CONSEQUENTIAL DAMAGES RESULTING FROM ANY BREACH OF WARRANTY OR CONDITION, OR UNDER ANY OTHER LEGAL THEORY. Some countries, districts or states do not allow the exclusion or limitation of relief, special, incidental, consequential or indirect damages, or the limitation of liability to specified amounts, so the above limitations or exclusions may not apply to you.

Exclusive Remedy

TO THE MAXIMUM EXTENT PERMITTED BY LAW, THIS LIMITED WARRANTY AND THE REMEDIES SET FORTH ABOVE ARE EXCLUSIVE AND IN LIEU OF ALL OTHER WARRANTIES, REMEDIES AND CONDITIONS, WHETHER ORAL OR WRITTEN, EXPRESS OR IMPLIED. TO THE MAXIMUM EXTENT PERMITTED BY LAW, KRAMER ELECTRONICS SPECIFICALLY DISCLAIMS ANY AND ALL IMPLIED WARRANTIES, INCLUDING, WITHOUT LIMITATION, WARRANTIES OF MERCHANTABILITY AND FITNESS FOR A PARTICULAR PURPOSE. IF KRAMER ELECTRONICS CANNOT LAWFULLY DISCLAIM OR EXCLUDE IMPLIED WARRANTIES UNDER APPLICABLE LAW, THEN ALL IMPLIED WARRANTIES COVERING THIS PRODUCT, INCLUDING WARRANTIES OF MERCHANTABILITY AND FITNESS FOR A PARTICULAR PURPOSE, SHALL APPLY TO THIS PRODUCT AS PROVIDED UNDER APPICABLE LAW.

IF ANY PRODUCT TO WHICH THIS LIMITED WARRANTY APPLIES IS A "CONSUMER PRODUCT" UNDER THE MAGNUSON-MOSS WARRANTY ACT (15 U.S.C.A. §2301, ET SEQ.) OR OTHER APPICABLE LAW, THE FOREGOING DISCLAIMER OF IMPLIED WARRANTIES SHALL NOT APPLY TO YOU, AND ALL IMPLIED WARRANTIES ON THIS PRODUCT, INCLUDING WARRANTIES OF MERCHANTABILITY AND FITNESS FOR THE PARTICULAR PURPOSE, SHALL APPLY AS PROVIDED UNDER APPLICABLE LAW.

Other Conditions

This limited warranty gives you specific legal rights, and you may have other rights which vary from country to country or state to state.

This limited warranty is void if (i) the label bearing the serial number of this product has been removed or defaced, (ii) the product is not distributed by Kramer Electronics or (iii) this product is not purchased from an authorized Kramer Electronics reseller. If you are unsure whether a reseller is an authorized Kramer Electronics reseller, please visit our Web site at www.kramerelectronics.com or contact a Kramer Electronics office from the list at the end of this document.

Your rights under this limited warranty are not diminished if you do not complete and return the product registration form or complete and submit the online product registration form. Kramer Electronics thanks you for purchasing a Kramer Electronics product. We hope it will give you years of satisfaction.

For the latest information on our products and a list of Kramer distributors, visit our Web site: www.kramerelectronics.com, where updates to this user manual may be found.
We welcome your questions, comments and feedback.

Caution

Safety Warning:
Disconnect the unit from the power supply before opening/servicing.

PN: 2900-000661 Rev: 4

Kramer Electronics, Ltd.
Web site: www.kramerelectronics.com
E-mail: info@kramerel.com

P/N: 2900-000661 REV 4